TEJAS

A premium four-motor electric spa treatment table crafted from natural wood and wood veneer, designed for hotel spas and resort wellness environments. Independently controlling height, backrest, leg rest, and Trendelenburg position, it delivers precise and effortless positioning for massages, facials, and body treatments. With lockable gas spring armrests and a clean, open base design, Tejas combines full clinical functionality with the warm, understated elegance that defines a true luxury spa environment.







DESIGN

Single piece fully electronic top cushion and nose slot with removable plug

FOAM CUSHION

150 mm mixed layers of different densities for comfortable massage experience

FRAME STRUCTURE

Natural Wood, Natural Wood Veneer and Powder Coated Mild Steel Frame

ADJUSTMENTS

Height	Electronically adjusted through 2 x 6000N Lifting columns
Backrest	Electronically adjusted through 1 x 6000N Actuator
Leg Rest	Electronically adjusted through 1 x 6000N Actuator
Arm Rest	Lockable Gas Springs
Trendelenburg Operation	Electronically adjusted through 2 x 6000N Lifting coloumns

LIFTING CAPACITY

250 Kgs

UPHOLSTERY

Type	**Phthalate-Free** Upholstery	**Veridura :** Ultra Soft Upholstery
Thickness	1.01 mm	1 mm
Tensile Strength	ISO 1421, 804 N / 5cm	ISO 1421, 869.22 N / 5cm
Features	Fire Retardant, Acetone & Disinfectant Resistant	Anti-Bacterial, Stain resistant, 20 years hydrolysis resistant
Weight	732 g / sqmt	726.7 g / sqmt
Abrasion	ISO 5470-2 = 2,00,000 cycles / min	ISO 5470-2 = 2,00,000 cycles / min

WOOD FINISH

Natural American White Oak PU, Natural American White Oak Water Base, Open Pore White Finish (RAL 9010), Open Pore Black, Dark Walnut, Yellow Teak, Wenge

WARRANTY

Structure	1 years
Electronic Motors & Controls	2 years

WEIGHTS

Net Weight	114 Kgs
Shipping Weight	165 Kgs
Shipping Dimension	L 210 x W 88 x H 82 cm

OPTIONAL

In built heating system - 24 V DC / 200W Heater with digital temperature contro upto 47°C
Fitted Covers in 100% cotton
Battery Box to operate the treatment table on chargeable batteries

DIMENSIONS

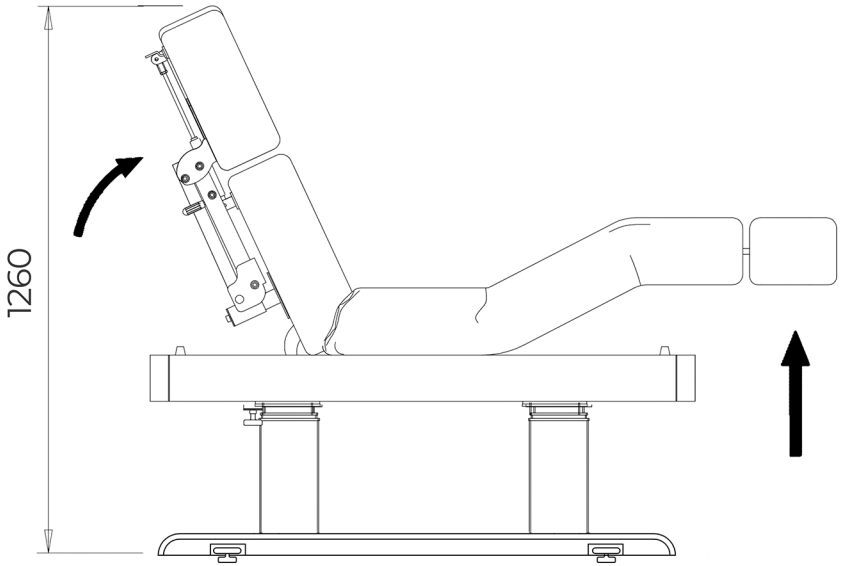

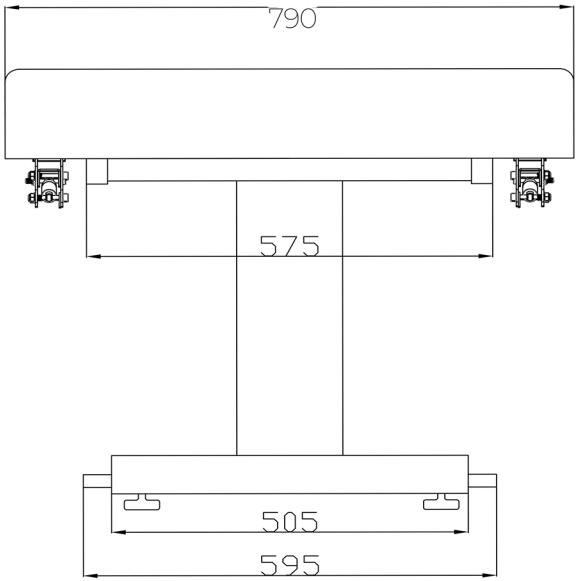

TRENDELENBURG

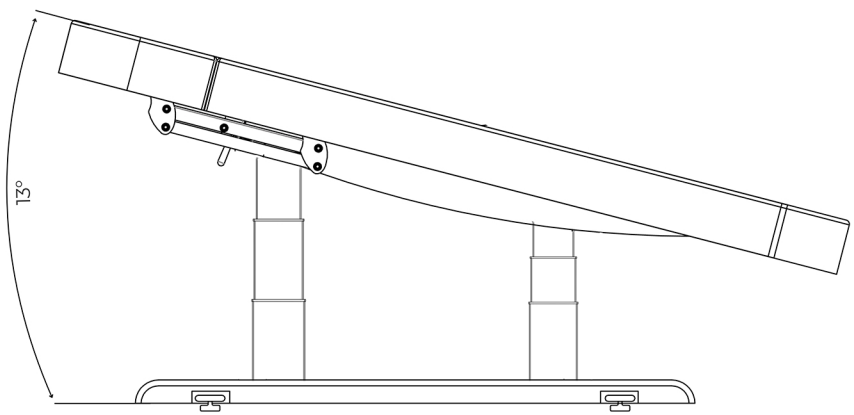

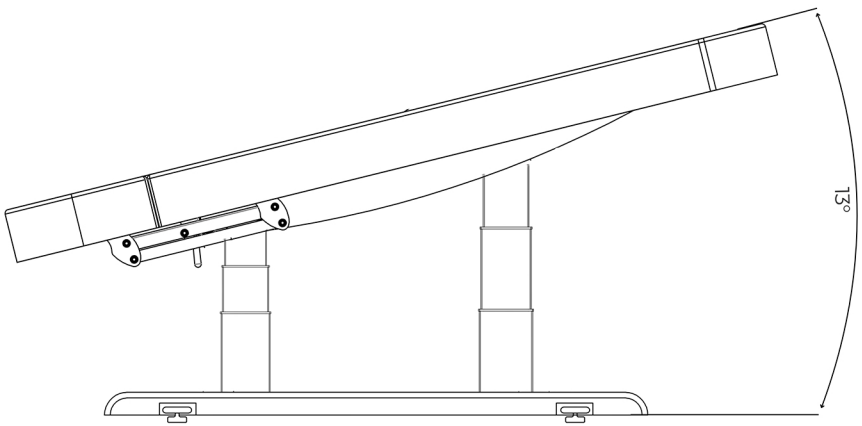

All dimensions are in mm

MAXIMUM HEIGHT

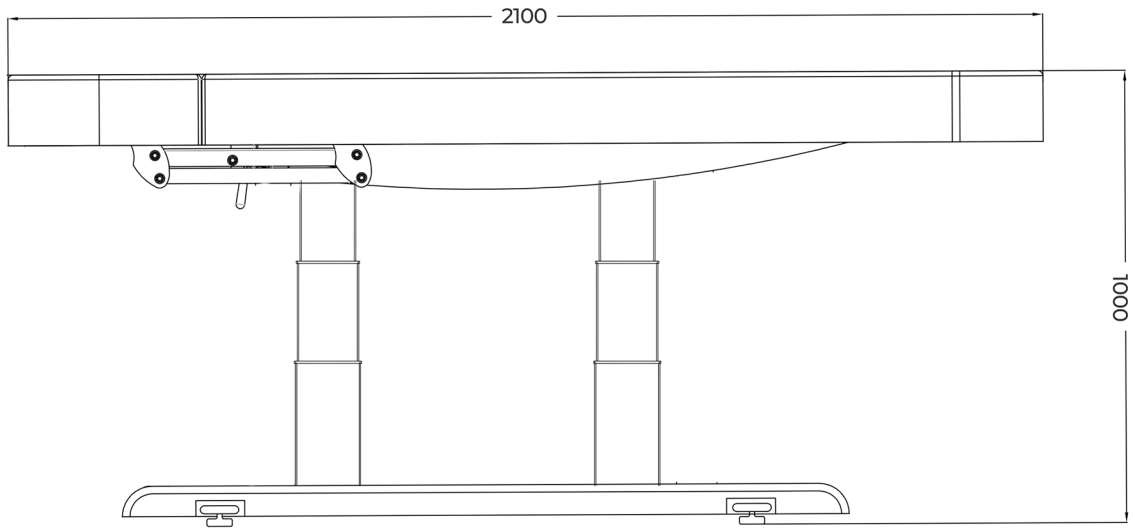

MINIMUM HEIGHT

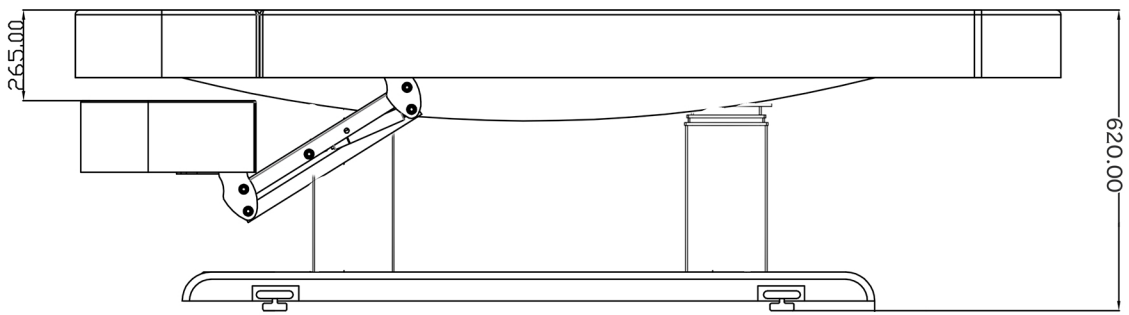

All dimensions are in mm